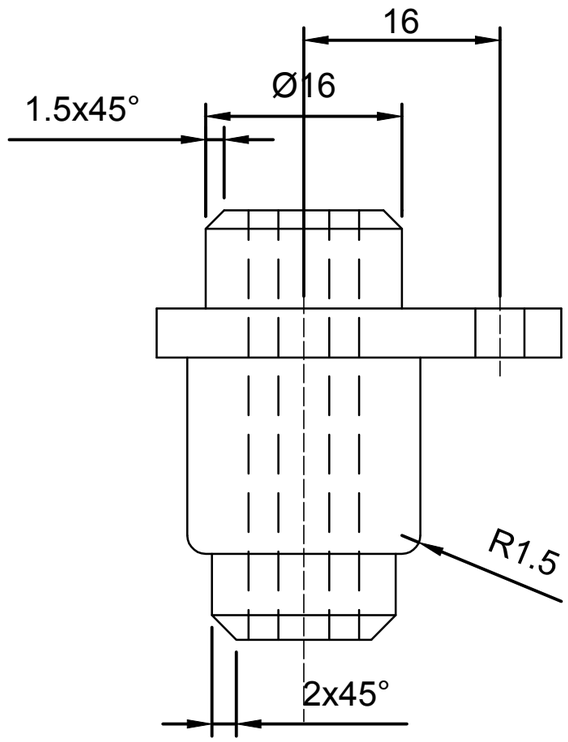

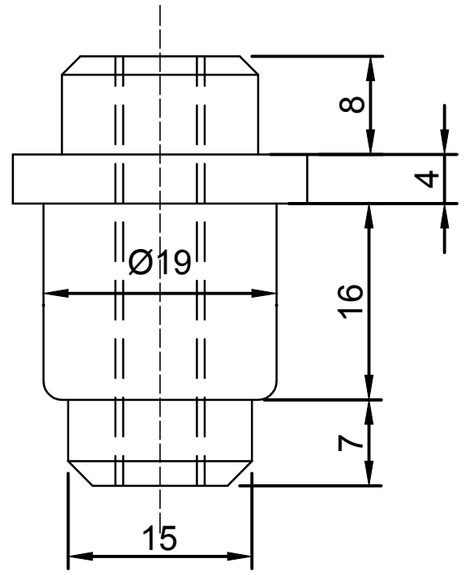

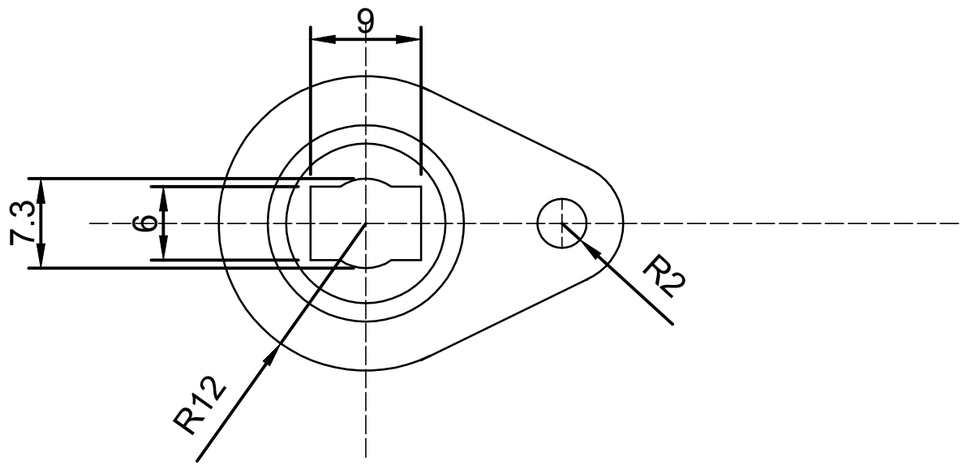

TERESA GADEK
verifica SMART - scala 2:1