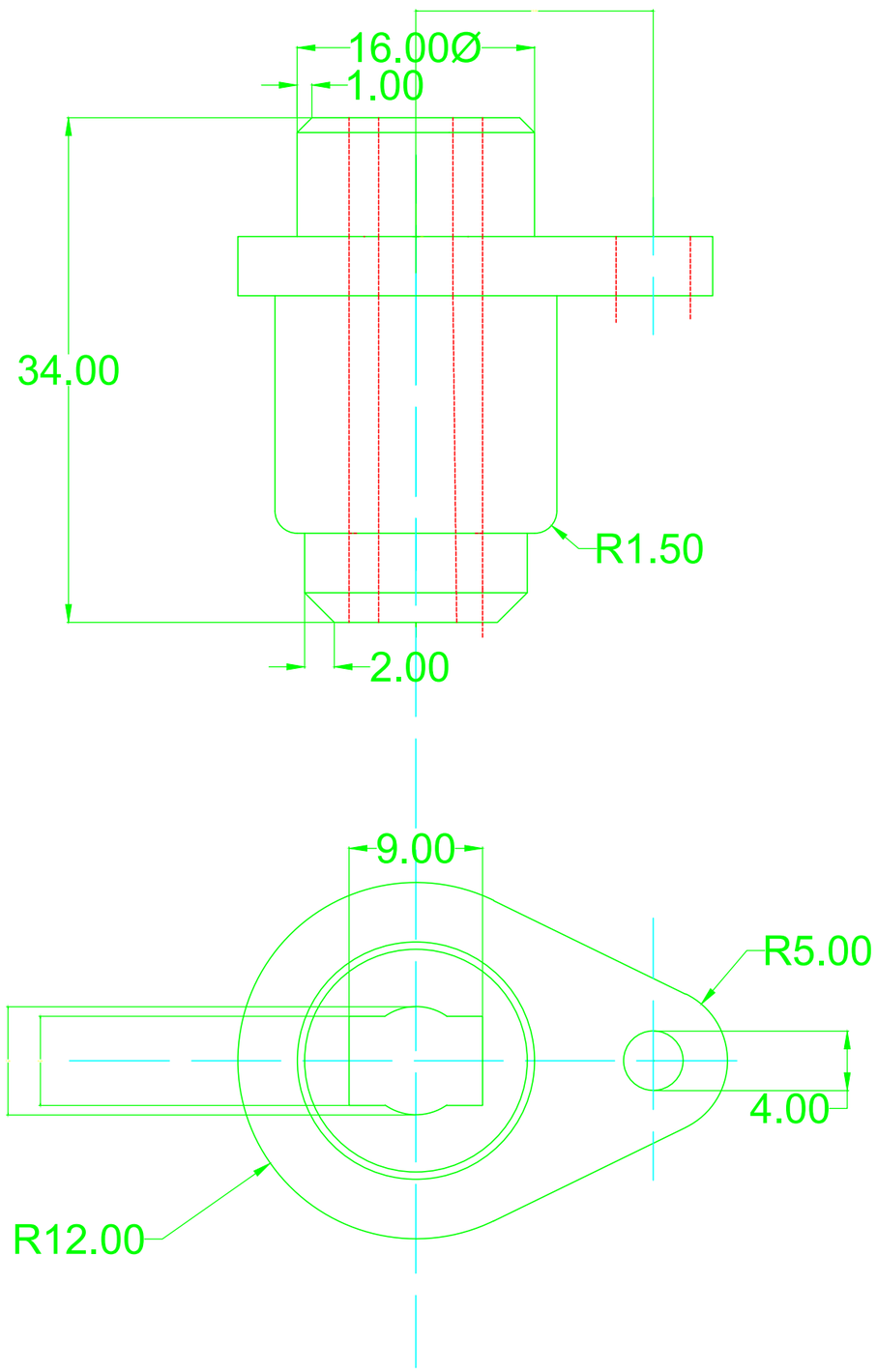
16.00Ø
1.00
34.00
R1.50
2.00
9.00
R5.00
4.00
R12.00

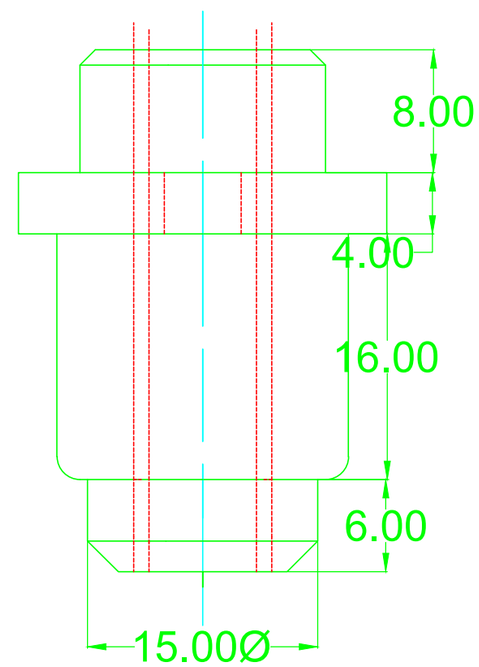
8.00
4.00
16.00
6.00
15.00Ø